Air Burners, LLC
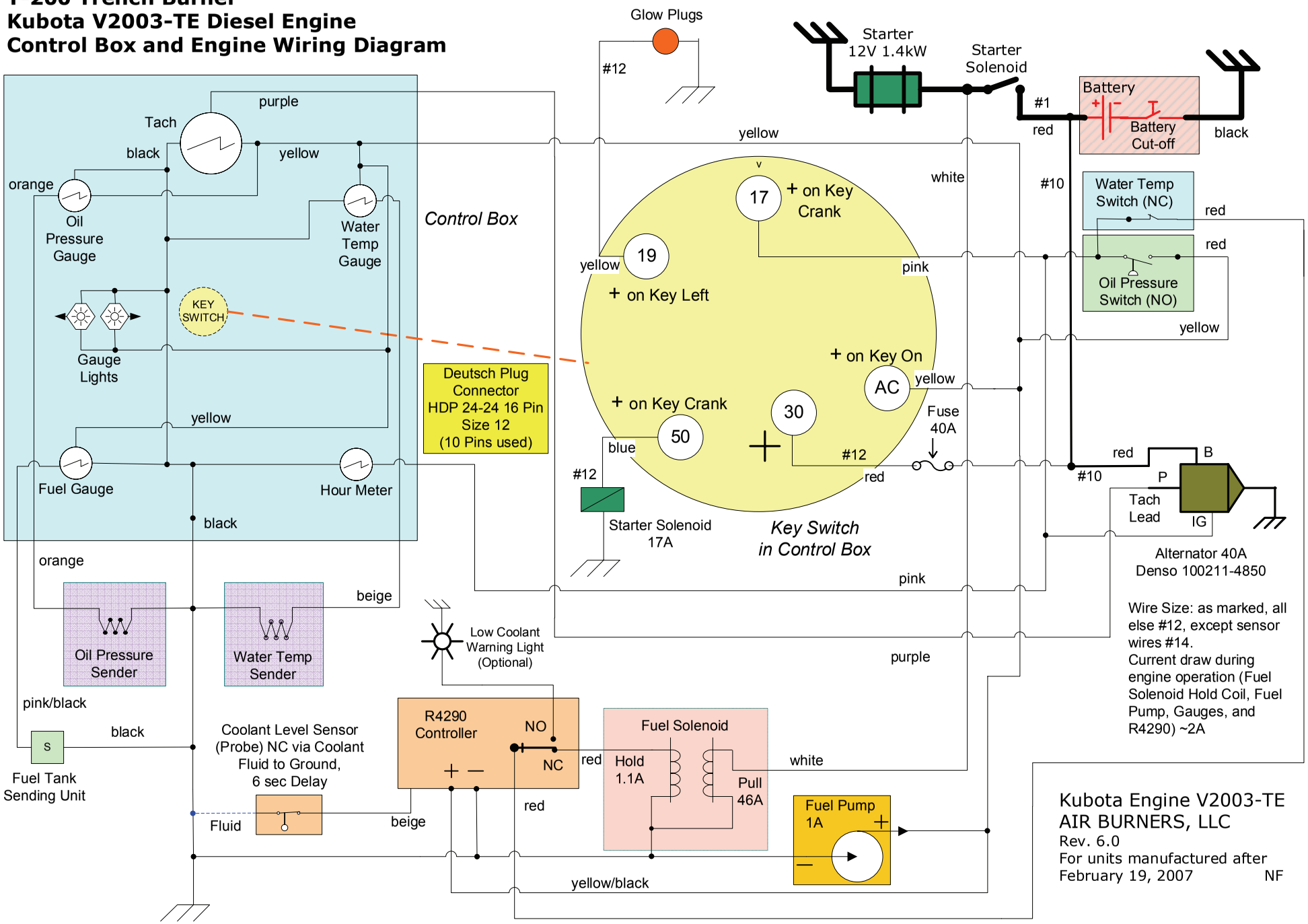
S-200, S-100 & S-10 Series Firebox Burners
T-200 Trench Burner
Kubota V2003-TE Diesel Engine
Control Box and Engine Wiring Diagram